SPECIFICATIONS

FOR MAGNETRON MSM244 & MSM707 Type

Type SERIES D

MANUFACTURER	CUSTOMER
SIGNATURES :	SIGNATURES :
PROPOSED BY	APPROVED BY

MSM24 Type Series D:

MSM244(920), MSM244J(930), MSM244J(935) MSM707

MSM244H(920), MSM244H(930), MSM244H(935)

MSM244K(940)

MSM244G(940)

Contents For MSM244Type Series D Specifications：

Type Series D Characteristics Parameters----------3
Type Series D Outline Drawing----------4
Type Series D Parts List----------5
Type Series D Performance Chart----------6
Type Series D Typical Rieke Diagram----------6
Type Series D Space in The Shielding Case----------7
Type Series D Filament Connection----------8
Type Series D RF Coupler----------9
Type Series D Label Drawing----------9
Type Series D Mounting Yoke Drawing----------10
Type Series D Material List----------11

Characteristic Parameters

This standard is based on EIAJED-1501 Testing Methods for Continuos Wave Magnetron.											
Description	Magnetron(Fixed Frequency、Integral Magnet)										
Function	For microwave Oven(2450MHz Band Continuous Wave Oscillation)										
Outer Dimensions	See Outline Drawing										
Absolute Maximum Ratings	Test Item	Ef	tk	ebm	Ib	ibm	Pi	σ L	Tp④	Tc④	Storage
	Unit	V	S	Kv	Madc	A	KW	——	℃	℃	℃
	Max.	3.75	——	4.5	370	1.2	1.4	4	330⑤	120⑥	60
	Min.	2.8	0	——	——	——	——	——	——	——	-30
Standard Test Condition	①②③	3.3	——	——	320	——	——	1.1max	——	——	——

Test Specification

Test Term		Test Method EIAJED-1501	Test Condition	Symbol	Nominal	Limit		Unit
						Min	Max	
**Vibration		5.4.1		——	——	——	——	——
Break Down Voltage		4.2	⑦	BVaf	——	——	——	——
Insulation		4.2	Et=1kVDC R.H.max.60%	Rpf	——	200	——	MΩ
*Filament Current		4.1.1	tk=120s	If	10	8	12	A
Peak Anode Voltage		4.3.1	⑧	ebm	4.4	4.2	4.6	KV
Average Power Output		4.3.3.1	⑧	Po	1050	1010	1090	W
Frequency		4.3.4		f	2458	2448	2468	MHz
*Load Characteristics	Pulling Figure	4.3.6	σ L=1.5	fpl	——	——	15	MHz
	Sink Phase	4.3.7		λ sink/λg	0.25	——	——	
*Stability Moding		4.3.11.2	σ L=2,3,4 t=60s	——	——	——	——	——
*Leakage Microwave		4.3.15	σ L=4	SI	——	——	10	W/㎡
**Life Test		4.5.1		t	——	500	——	H
**Life Test End Point	Average Power Output	4.3.3.1	⑧	Po	——	840	——	W

Outline Drawing

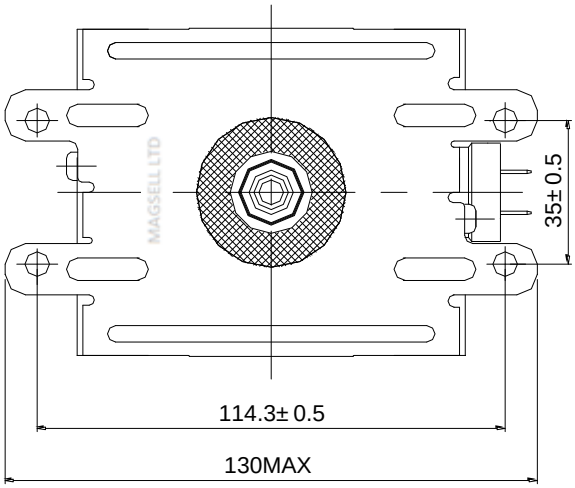

Unit：mm

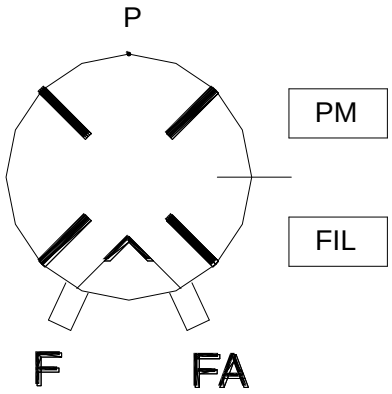

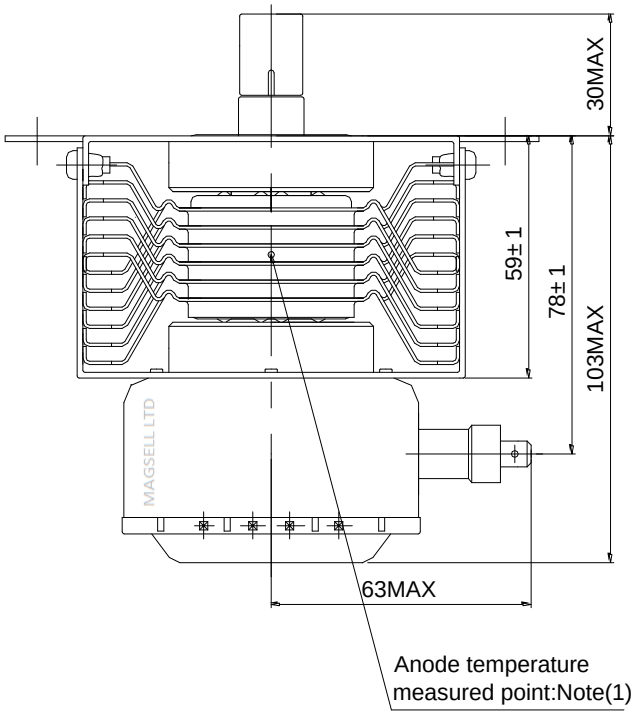

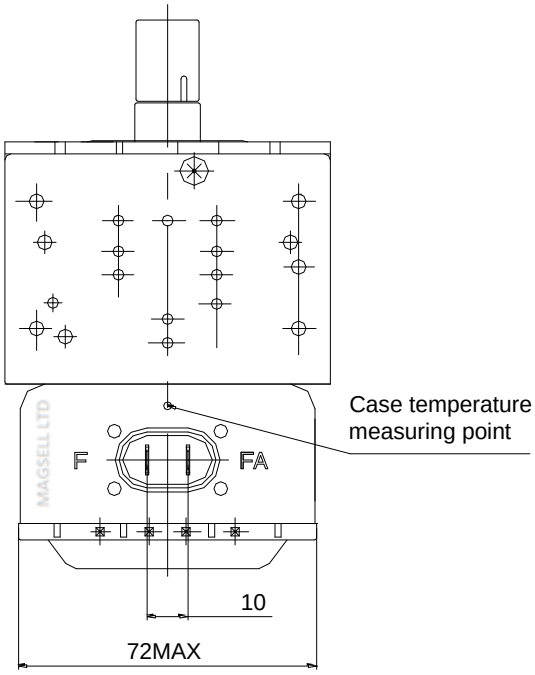

Parts List

NO	Parts name	Material/Spec	Q'ty
①	Core tube	Copper,Ceramic,other	1
②	Gasket Ring	Steel(Zn plated) T0.25	1
③	RF gasket	Brass	1
④	Mounting Yoke	Steel(Zn plated) T1.4	1
⑤	Magnet	Sr or Ba Ferrite	2
⑥	Yoke Assembly	Steel (Zn Plated) T1.4&T0.4	1
⑦	Cooling fin	Aluminum T0.8	6
⑧	Shield Case Cover	Steel(Zn plated) T0.4	1
⑨	Filter Assembly	C: 500pFx2 WV10kVdc / L:1.5μ Hx2	1
⑩	Label	Label	1
⑪	Screw	SWRCH M4xL8	2

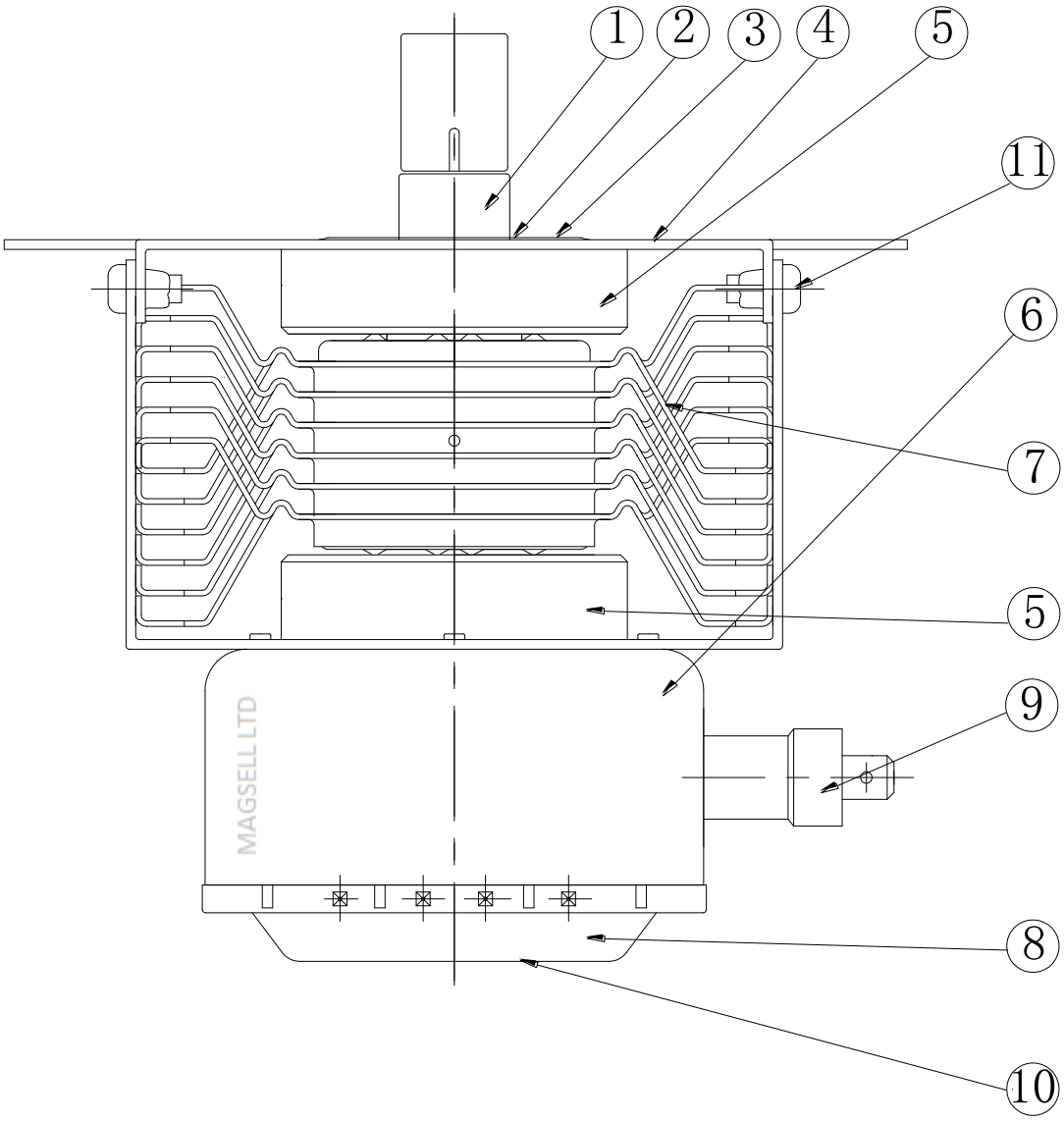

Performance Chart

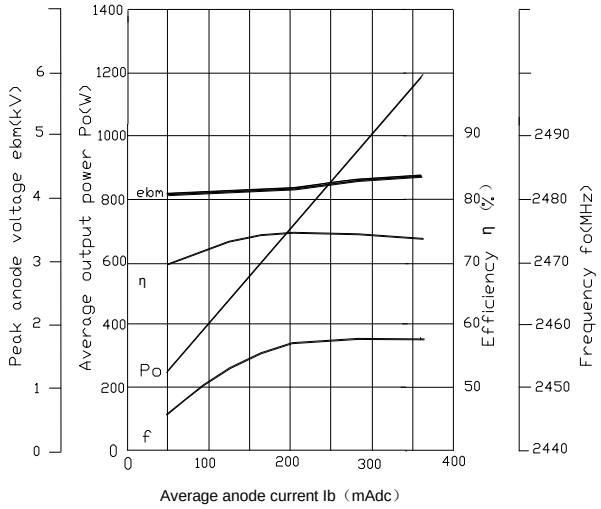

Operating conditions:
Power supply:Single phase full wave rectified without filter
Filament voltage:3.3V
Load VSWR:1.1MAX

Rieke Diagram

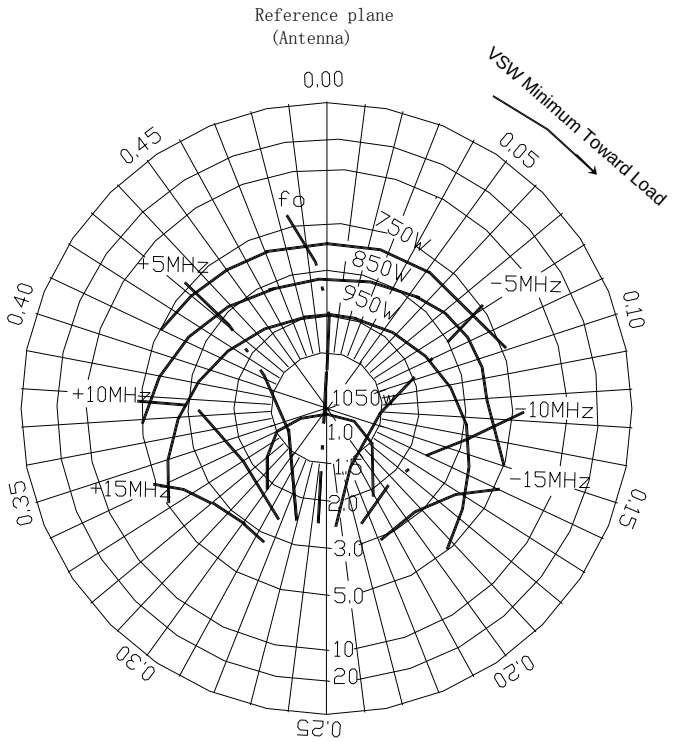

Operating conditions
Power supply:Single phase full wave rectified without filter
Filament voltage:3.3V
Average anode current:320mA$_{DC}$ (constant)

Space in the Shielding case

Unit: mm

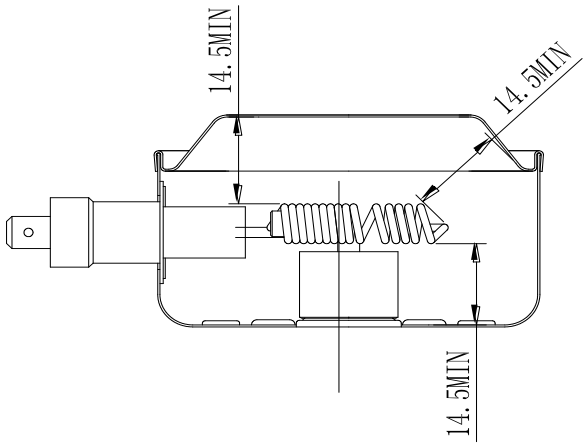

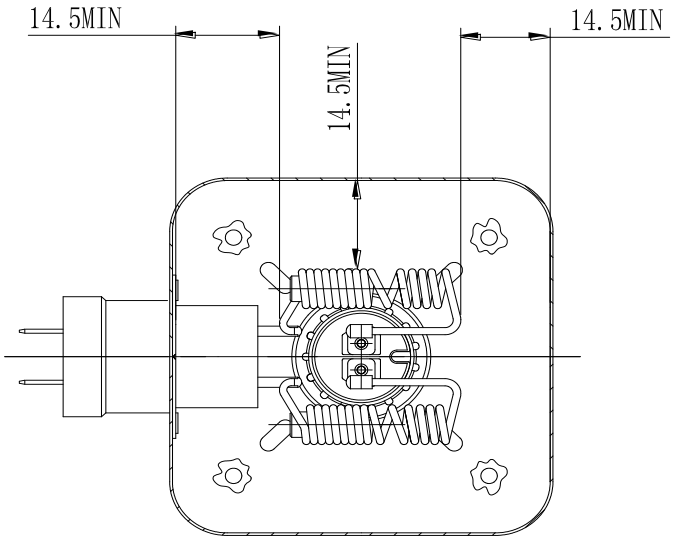

Filament Connection

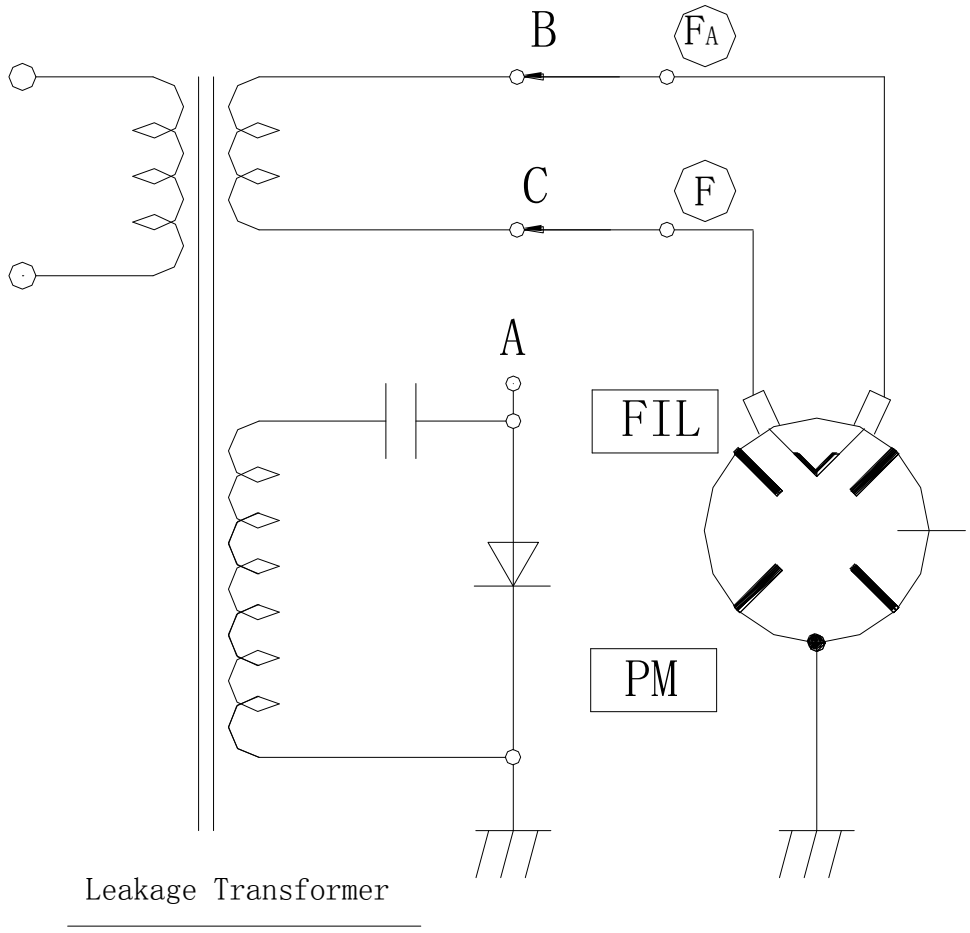

How to connect filament

The phase between the filament coil and the high voltage coil are related as shown in the above diagram。

(1) FA terminal will be connected to " B" .and

F terminal will be connected to " C" .

(2) " A" will be connected to " B" or " C" .

RF Coupler

Unit:mm

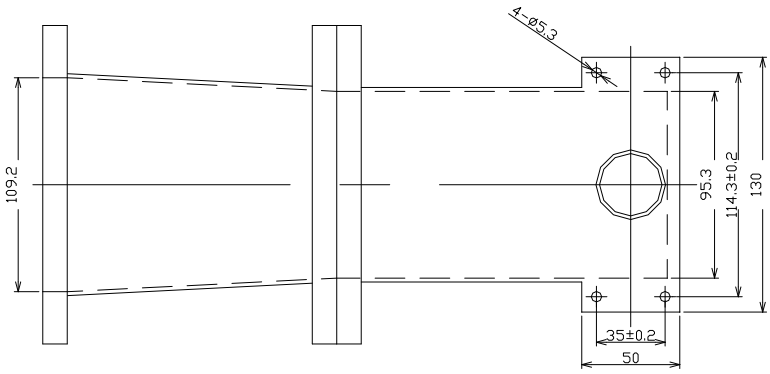

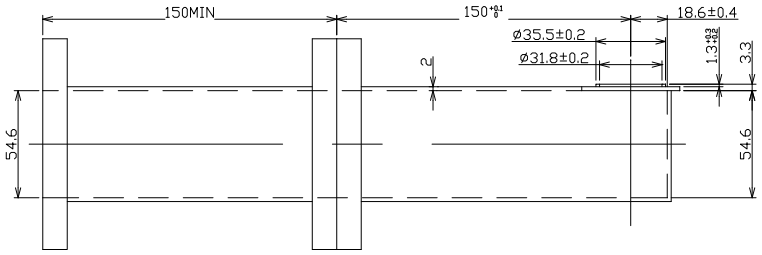

Label Specification

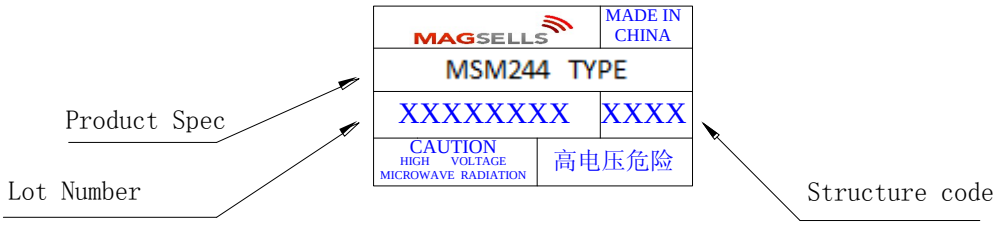

Note:

1、Product Spec: It indicates magnetron's model name.

2、Lot NO: It shows the manufacturing date and the numble of assembly line.

3、"xxxx" as the magnetron's structure code.

Mounting Yokes List

Unit:mm

920

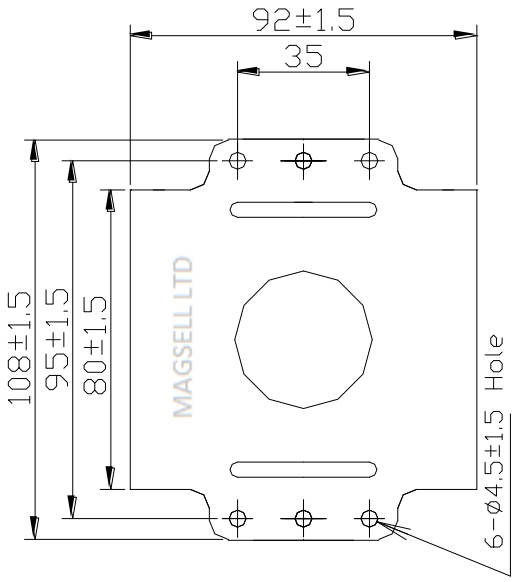

930

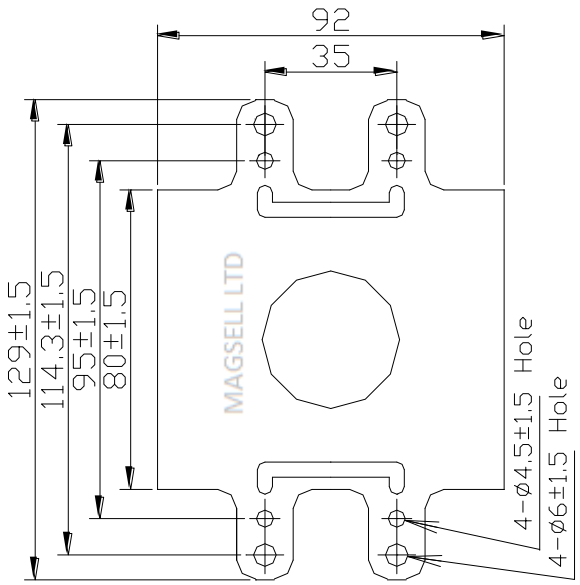

940

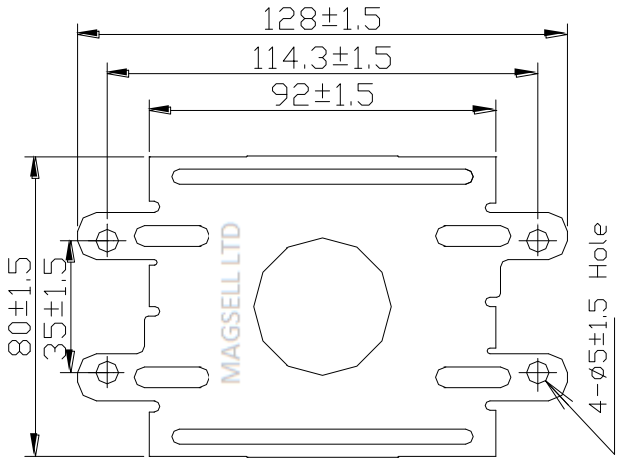
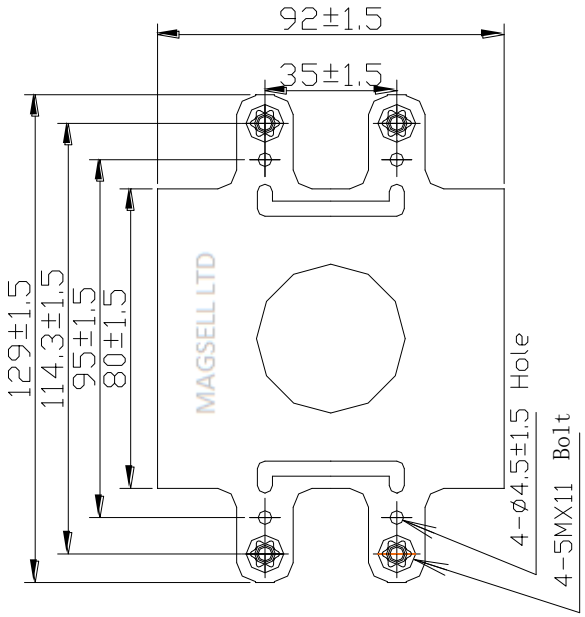
935