WITOL

SPECIFICATIONS

FOR
WITOL MAGNETRON
2M463K SERIES

Magsells part
Number MSM262

MANUFACTURER	CUSTOMER
SIGNATURES :	SIGNATURES :
PROPOSED BY	APPROVED BY

GD WITOL VACUUM ELECTRONIC MANUFACTURE CO.,LTD.

2M463 Series Products in Witol:

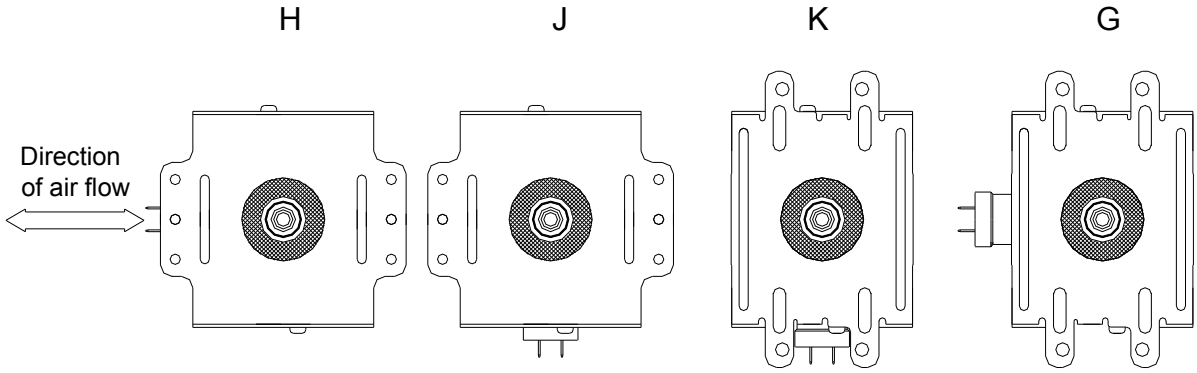

Contents For 2M463 Series Specifications:

2M463 Series Characteristics Parameters ----------3
2M463 Series Outline Drawing----------4
2M463 Series Parts List----------5
2M463 Series Performance Chart----------6
2M463 Series Typical Rieke Diagram----------6
2M463 Series Space in The Shielding Case----------7
2M463 Series Filament Connection----------8
2M463 Series RF Coupler----------9
2M463 Series Label Drawing----------9
2M463 Series Mounting Yoke Drawing----------10

Characteristic Parameters

This standard is based on EIAJED-1501 Testing Methods for Continuos Wave Magnetron.											
Description	Magnetron(Fixed Frequency、Integral Magnet)										
Function	For microwave Oven(2450MHz Band Continuous Wave Oscillation)										
Outer Dimensions	See Outline Drawing										
Absolute Maximum Ratings	Test Item	Ef	tk	ebm	Ib	ibm	Pi	σ L	Tp④	Tc④	Storage
	Unit	V	S	Kv	Madc	A	KW	——	℃	℃	℃
	Max.	3.5	——	5.0	480	1.8	2.3	3	330⑤	100⑥	60
	Min.	2.5	0	——	——	——	——	——	——	——	-30
Standard Test Condition	①②③	3.0	——	——	430	——	——	1.1max	——	——	——

Test Specification

Test Term		Test Method EIAJED-1501	Test Condition	Symbol	Nominal	Limit		Unit
						Min	Max	
**Vibration		5.4.1		——	——	——	——	——
Break Down Voltage		4.2	⑦	——	——	——	——	——
Insulation		4.2	Et=1kVDC R.H.max.60%	Rpf	——	200	——	MΩ
*Filament Current		4.1.1	tk=120s	If	10	8	12	A
Peak Anode Voltage		4.3.1	⑧	ebm	4.65	4.5	4.8	KV
Average Power Output		4.3.3.1	⑧	Po	**1500**	1380	——	W
Frequency		4.3.4		f	2458	2448	2468	MHz
*Load Characteristics	Pulling Figure	4.3.6	σ L=1.5	fpl	——	——	15	MHz
	Sink Phase	4.3.7		λ sink/λg	0.25	——	——	
*Stability Moding		4.3.11.2	σ L=2,3,4 t=60s	——	——	——	——	——
*Leakage Microwave		4.3.15	σ L=4	SI	——	——	10	W/m²
**Life Test		4.5.1		t	——	500	——	H
**Life Test End Point	Average Power Output	4.3.3.1	⑧	Po	——	1160	——	W

Note：1.Prescribed R.F. Coupler(Refer to the attached chart) or the similar type must be used.

2.Water-coolate flow Rate (1.8 L/min).

3.Single phase full wave rectified without filter shall be used for power supply.

4.See outline drawing for temperature measuring point.

5.Maximum saturated anode temperature for normal condition(with load in the cavity) should be 220℃. But, in the case of professional use, absolute maximum anode temperature should be 250℃。

6.The capacitor temperature should be 120℃。

7.Et=10kVDC 或 Et=7.1kVAC t=60sec。

8.The surrounding temperature will be settled at the value of 25℃； and it's exchange rate should be -0.002℃。

9.Tests shall be classified as follows: None mark:production test, *mark:design test, **marktype approval test

2M463K

Outline Drawing

Unit: mm

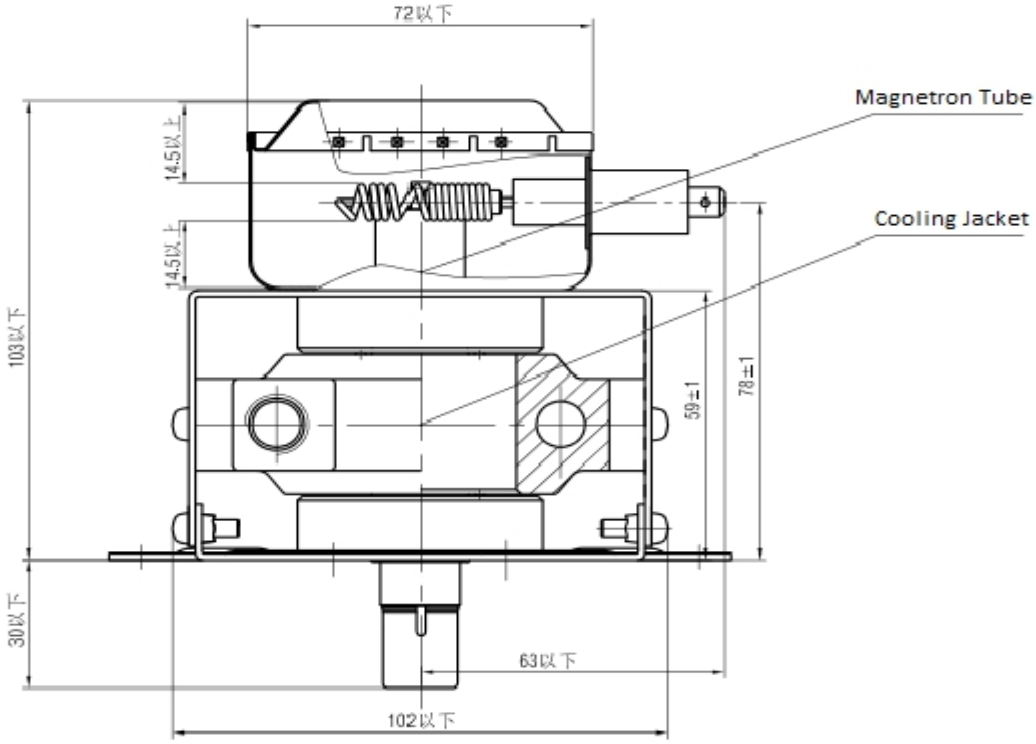

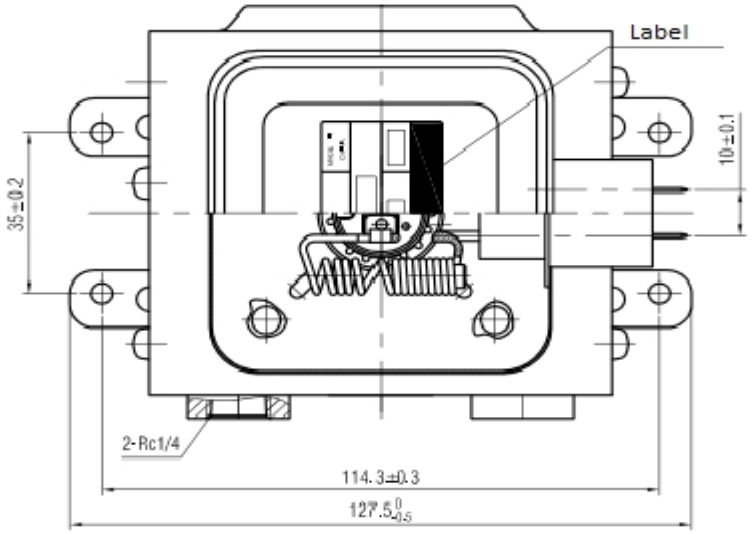

Parts List

NO	Parts name	Material/Spec	Q'ty
①	Core tube	Copper, Ceramic, other	1
②	RF gasket	Brass	1
③	Yoke Assembly	Steel (Zn Plated) T1.4&T0.4	1
④	Gasket Ring	Steel (Zn plated) T0.25	1
⑤	Magnet	Sr or Ba Ferrite	2
⑥	Screw	SWRCH M4xL8	2
⑦	Water-cooling jacket	T0.8	6
⑧	Main body housing	Steel (Zn plated) T0.4	1
⑨	Filter Assembly	C：500pFx2 WV10kVdc / L:1.5μHx2	1
⑩	Shield Case Cover	Steel (Zn plated) T0.4	1
⑪	Label	Label	1

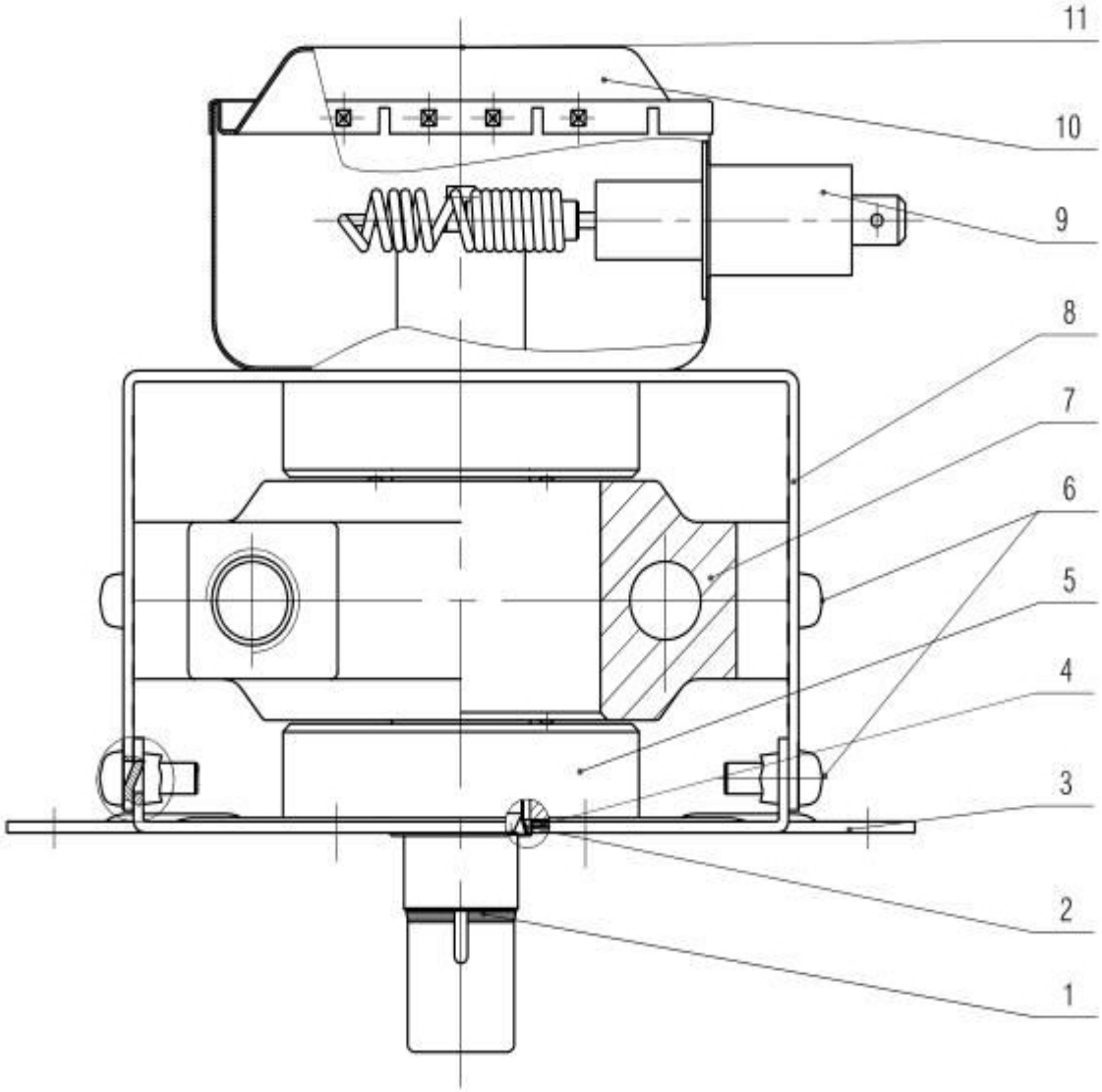

Performance Chart

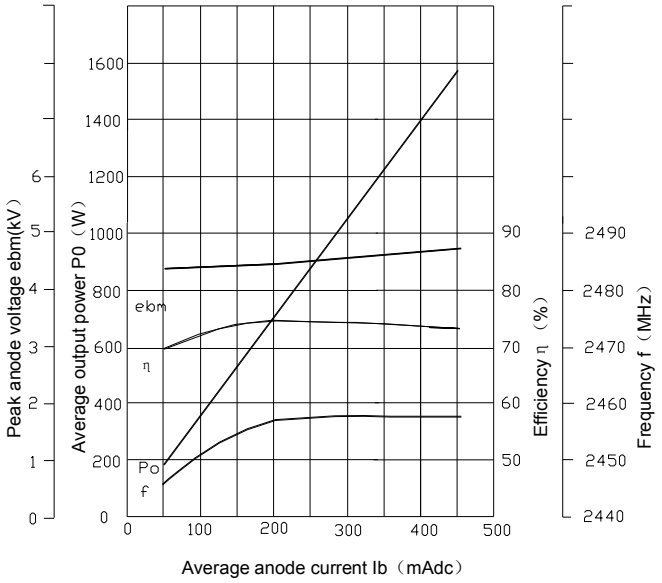

Operating condintions:
Power supply:Single phase full wave recited without filter
Filament voltage:3.0V
Load VSWR:1.1MAX

Rieke Diagram

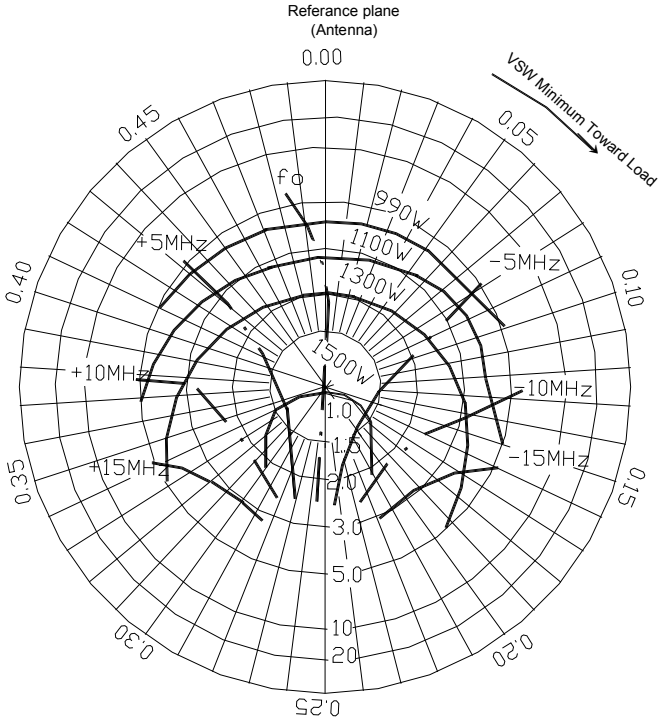

Operating conditions
Power supply:Single phase full wave recited without filter
Filament voltage:3.0V
Average anode current:430mAdc(constant)

Space in the Shielding case

Unit: mm

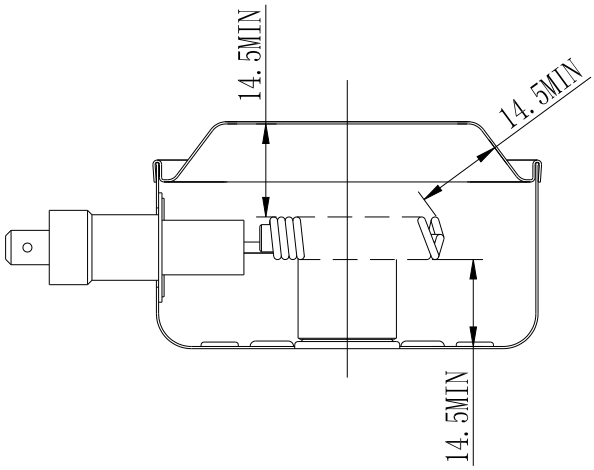

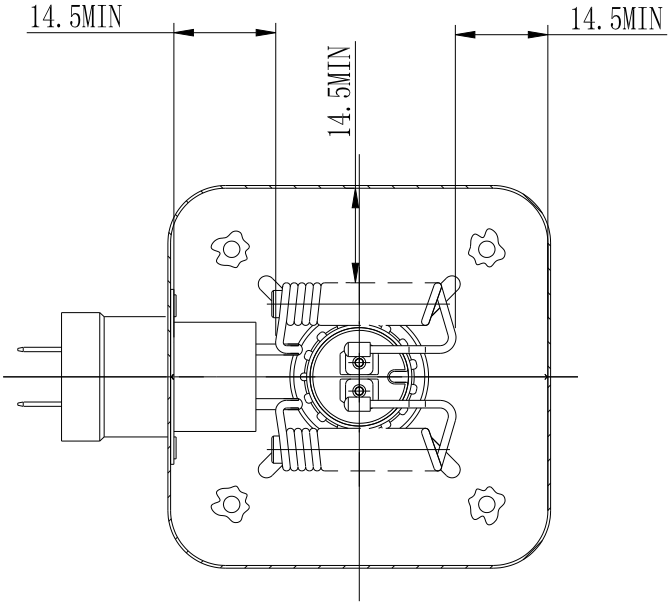

Filament Connection

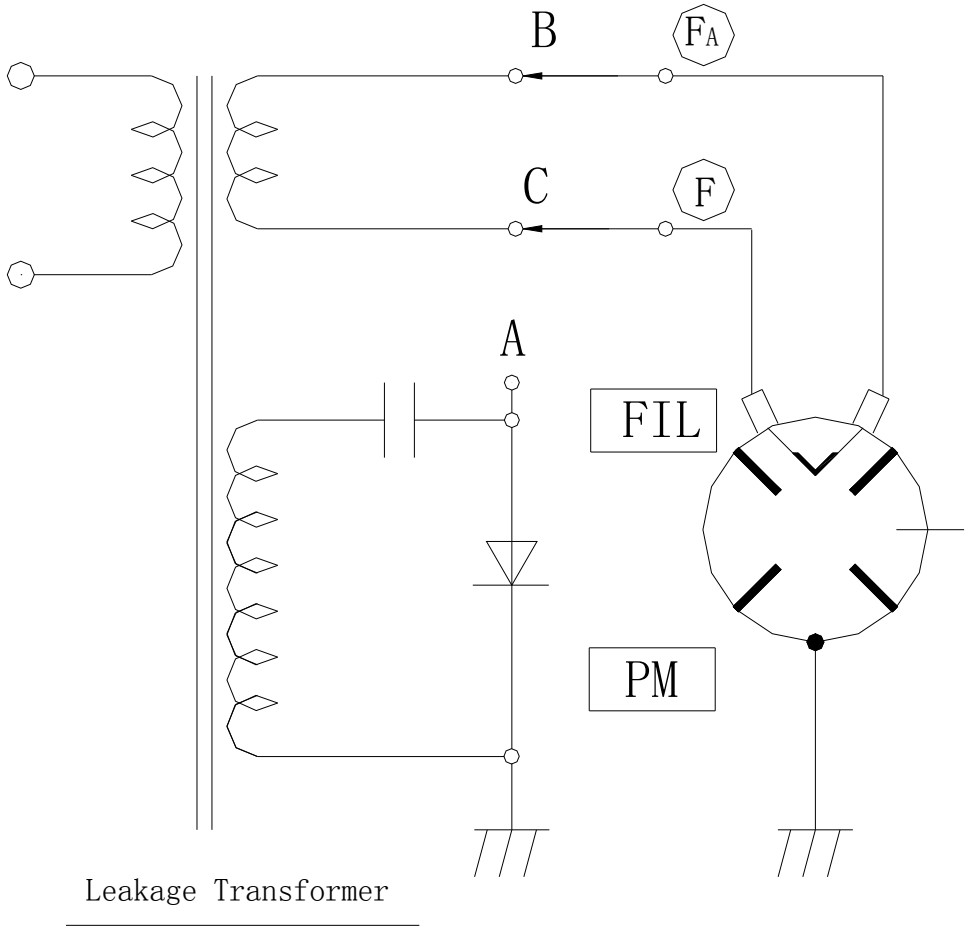

How to connect filament

The phase between the filament coil and the high voltage coil are related as shown in the above diagram。

(1) FA terminal will be connected to " B" .and

F terminal will be connected to " C" .

(2) " A" will be connected to " B" or " C" .

RF Coupler

Unit:mm

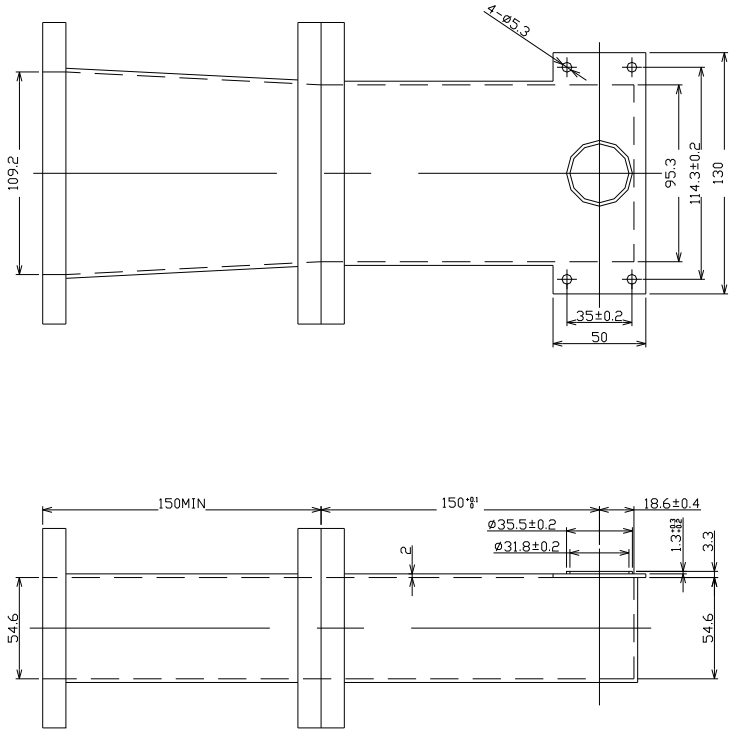

Label Specification

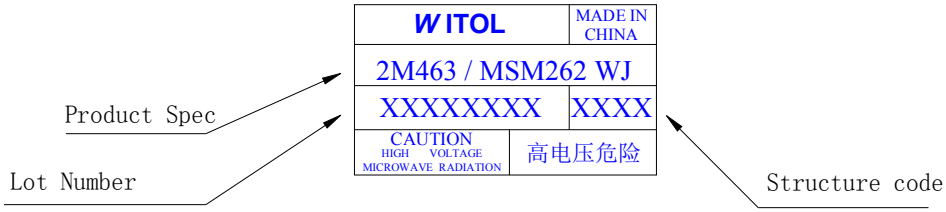

Note:

1、Product Spec: It indicates magnetron's model name.
2、Lot NO: It shows the manufacturing date and the numble of assembly line.
3、"xxxx" as the magnetron's structure code.

Mounting Yokes List

Unit:mm

920

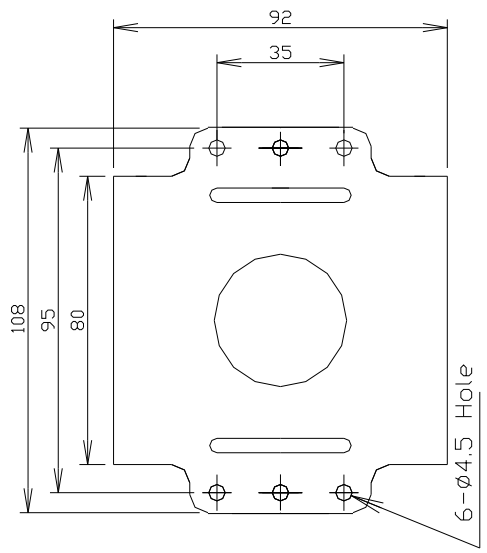

930

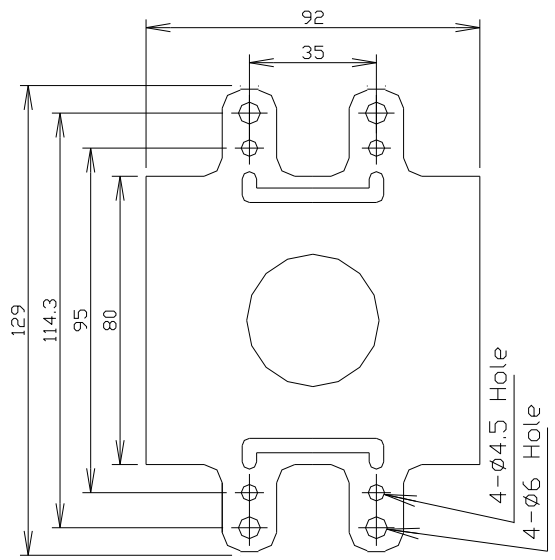

940

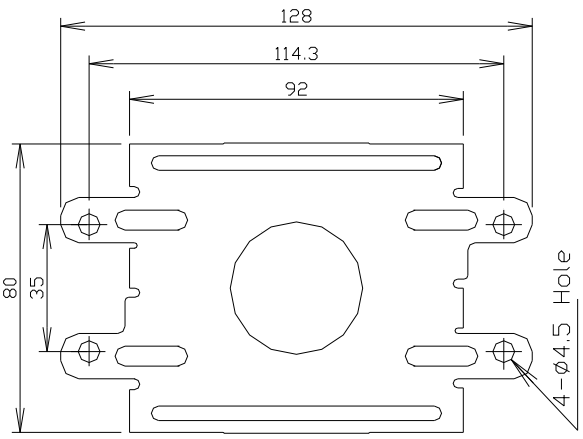
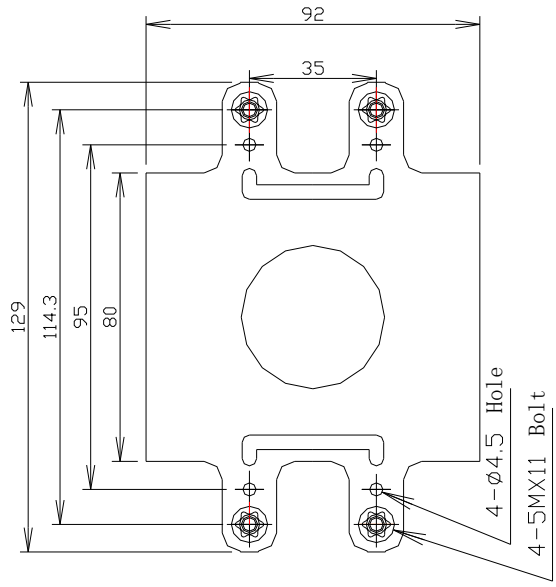
935